DUDLEY INDUSTRIES

Installation and User Guide

Anti-Ligature Ultra+ Washroom Dispenser Range

Applicable to the following products:

92424WH	Multi-Flat Toilet Tissue Dispenser
92421WH	Auto Foam Soap Dispenser (Small)
92420WH	Auto Foam Soap Dispenser (Large)
92423WH	Paper Towel Dispenser (Small)
92422WH	Paper Towel Dispenser (Large)
92425WH	Combo Unit (Small) Auto Foam Soap & Paper Towel Dispenser

PLEASE NOTE: The anti-ligature design features of this product do not replace or substitute the need for the necessary supervision of those who may be at risk, or for other protective measures to be taken in the specific circumstances of usage.

Dudley Industries Ltd does not claim any product to totally prevent ligatures being attached or make claims that they cannot be damaged by intent through vandalism. It is therefore the customer's responsibility to ensure the suitability of the product for the environment in which they are to be fitted, that they are installed according to the instructions and that the necessary supervision is in place.

WASHROOM ACCESSORIES

Version 1.0

Thank you for choosing a Dudley Industries Anti-Ligature Ultra+ Dispenser.

This dispenser is designed and manufactured by our team at our facilities based in Lancashire, UK. All our products are designed to withstand constant use in busy environments. Our Anti-Ligature washroom dispenser ranges are supported by a 10 year warranty provided they are installed and maintained correctly and not subject to any vandalism. Products must not be modified in any way as this will invalidate the warranty.

Please follow these instructions for safe installation and pass this document to the user for safe keeping.

10 YEARS WARRANTY

Safety Information

Please read these instructions thoroughly before installation and retain for future reference.

Remove all packaging and check contents for any damage prior to commencing installation.
If there are any issues please contact our Customer Services Team on +44 (0) 1253 738311.

Before commencing installation and drilling into walls check that there are no hidden electrical cables or water pipes.

When using power tools always ensure you wear the correct PPE and operate following the manufacturer's instructions.





This dispenser should only be used for the type of soap/paper specified.

Product Features

The Anti-Ligature Ultra+ washroom dispensers are constructed from 304 stainless steel and powder coated white.

Internal mechanisms are constructed from mixed materials.

All automatic soap dispensers are compatible with foam soap cartridges 375ml (small)/1L (large).

Automatic soap dispensers are operated by placing a hand underneath the unit which is detected by the infrared technology which then triggers the pump.

All units have Slide-down access chamber for fast, easy refill.

All units are lockable to protect the contents and spare keys are available from Customer Services.

Dispensers were designed in conjunction with the experts at The Anti-Ligature Shop.

IMPORTANT: Wall Survey

As the installer it is your responsibility to ensure the correct fixings are used for the wall and surface the dispenser is being installed on. It is essential to survey the wall prior to commencing installation and to ensure that the fixings used are fit for purpose and appropriate for the wall's construction.

Example:











MULTI-FLAT TOILET TISSUE DISPENSER & AUTO FOAM SOAP DISPENSER (SMALL/LARGE) INSTALLATION

Wall Mounting Instructions:

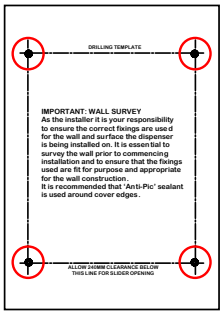

Example drilling template

1) Mark, drill and prepare wall fixings:

Using the drilling template included with the dispenser; mark the position of the fixing holes on the wall ensuring that they are level. Allow for slider opening when positioning.

Drill holes in the wall using the appropriate size drill bit. Drill to the depth of the wall plug being used. Insert wall plugs.

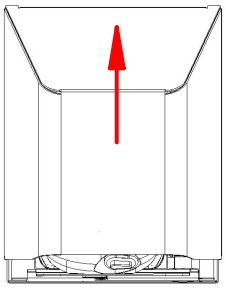
Remove cover

2) Prepare unit and fix to wall:

Remove the cover by sliding upwards. Unlock the filling chamber and slide down to access fixing holes.

Insert screws and securely fix the backplate to the wall in the holes prepared. We always recommend that you use all fixing holes available for strength and security.

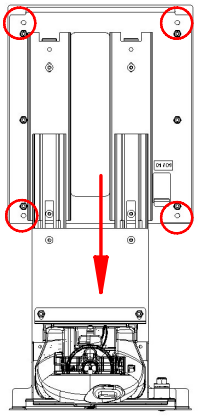
Access fixing holes

3) Close and lock cover:

Refit cover and slide downwards, fix securely by tightening the 2 fixing screws using allen key provided.

Push up filling chamber and lock securely with key.

It is recommended that Anti-pic sealant is used to secure the outer edge of the dispenser.

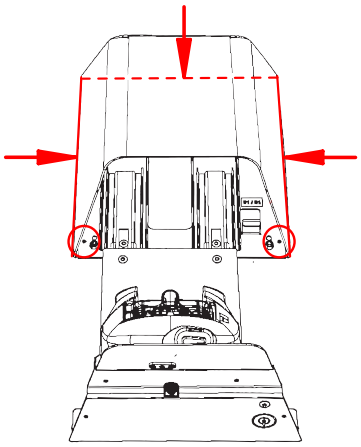
Fix cover / apply anti-pic sealant

Auto Foam Soap Dispenser - before first use insert batteries (not included) - see Battery Installation and Replacement - page 8.

PAPER TOWEL DISPENSER (SMALL/LARGE) INSTALLATION

Wall Mounting Instructions:

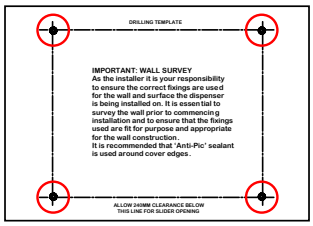

Example drilling template

1) Mark, drill and prepare wall fixings:

Using the drilling template included with the dispenser; mark the position of the fixing holes on the wall ensuring that they are level. Allow for slider opening when positioning.

Drill holes in the wall using the appropriate size drill bit. Drill to the depth of the wall plug being used. Insert wall plugs.

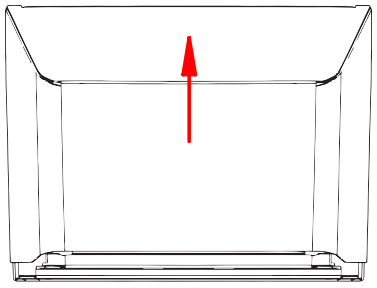
Remove cover

2) Prepare unit and fix to wall:

Remove the cover by unfastening cover retaining screws and sliding upwards. Unlock the filling chamber and slide down to access fixing holes.

Insert screws and securely fix the backplate to the wall in the holes prepared. We always recommend that you use all fixing holes available for strength and security.

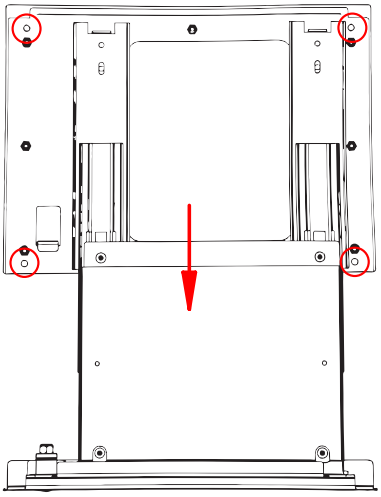
Access fixing holes

3) Close and lock cover:

Refit cover and slide downwards, fix securely by tightening the 2 fixing screws using allen key provided.

Push up filling chamber and lock securely with key.

It is recommended that Anti-pic sealant is used to secure the outer edge of the dispenser.

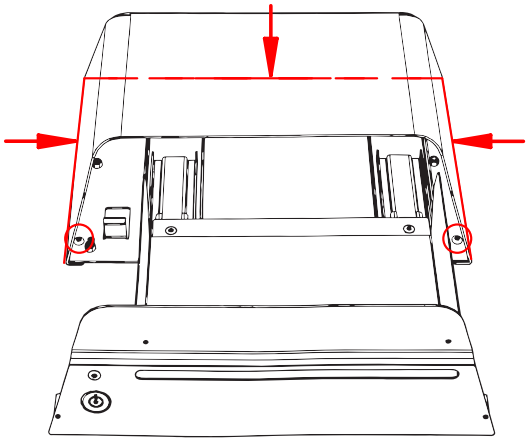
Fix cover / apply anti-pic sealant

COMBO UNIT AUTO FOAM SOAP & PAPER TOWEL DISPENSER INSTALLATION

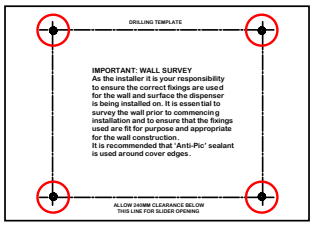

Example drilling template

Wall Mounting Instructions:

1) Mark, drill and prepare wall fixings:

Using the drilling template included with the dispenser; mark the position of the fixing holes on the wall ensuring that they are level. Allow for slider opening when positioning.

Drill holes in the wall using the appropriate size drill bit. Drill to the depth of the wall plug being used. Insert wall plugs.

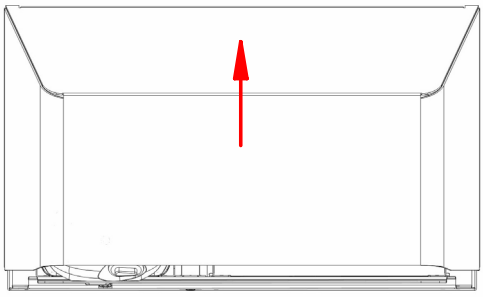
Remove cover

2) Prepare unit and fix to wall:

Remove the cover by sliding upwards. Unlock the filling chamber and slide down to access fixing holes.

Insert screws and securely fix the backplate to the wall in the holes prepared. We always recommend that you use all fixing holes available for strength and security.

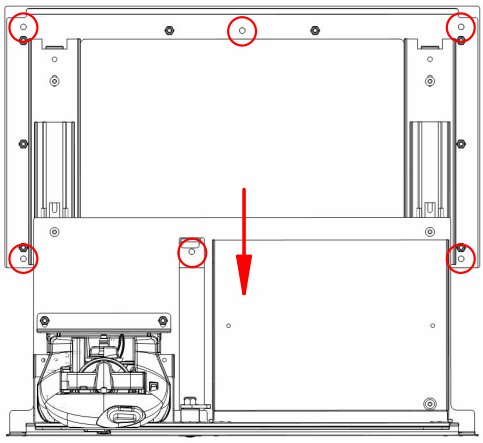
Access fixing holes

3) Close and lock cover:

Refit cover and slide downwards, fix securely by tightening the 2 fixing screws using allen key provided.

Push up filling chamber and lock securely with key.

It is recommended that Anti-pic sealant is used to secure the outer edge of the dispenser.

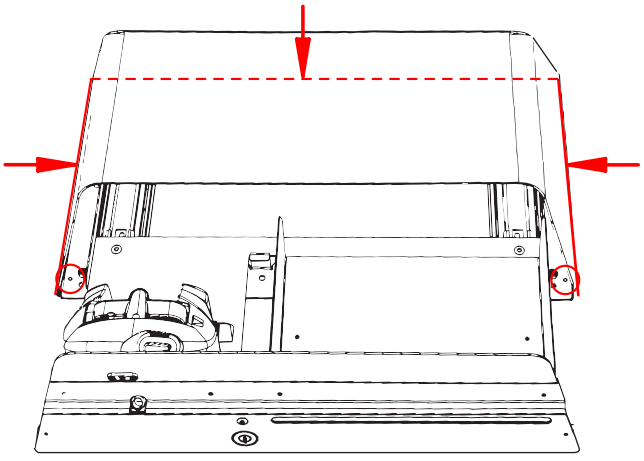
Fix cover / apply anti-pic sealant

Auto Foam Soap Dispenser - before first use insert batteries (not included) - see Battery Installation and Replacement - page 8.

Filling and Refilling

Multi-Flat Toilet Tissue Dispenser
Unlock the filling chamber and slide it down fully.

Remove the paper sleeve from the tissue pack (if there is one) and simply place the tissues into the chamber. Release the bottom tissue so that it is visible below the unit.

Slide filling chamber upward and lock it securely.

Soap Dispenser
Unlock the filling chamber and slide it down fully.

Remove the empty soap cartridge by pulling it straight up and out. Insert the replacement cartridge, verifying it is the correct size and formulation for foam soap. Seat the cartridge into the housing and push firmly downward until it clicks into place.

Slide filling chamber upward and lock it securely.

Prime the dispenser by placing your hand beneath the infrared sensor 3–5 times until soap dispenses consistently from the nozzle.

Paper Towel Dispenser
Unlock the filling chamber and slide it down fully.

Remove the paper sleeve from the paper towel pack (if there is one) and simply place the towels into the chamber. Release the bottom towel so that it is visible below the unit. If towels are interleaved the next paper towel should always be visible to users.

Slide filling chamber upward and lock it securely.

Battery Installation and Replacement

Auto Foam Soap Dispenser (Small/Large) & Combo Unit Auto Foam Soap

1) **Open the Unit:** Unlock the filling chamber and slide it down fully. Carefully remove the soap cartridge if installed.

2) **Remove the Locking Bracket:** Using a 7mm socket, unfasten the M4 nyloc nuts and remove the locking bracket.

3) **Access the Battery Compartment:** Push up on the soap pump mechanism to release it from the housing, then remove the rear access panel.

4) **Insert / Replace Batteries:** Insert 4 × C (LR14) alkaline batteries, observing the correct polarity (+/–) indicated inside the compartment. Use alkaline batteries only.

5) **Reassemble the Mechanism:** Refit the rear access panel, align the soap mechanism with the slots in the filling chamber, and push it back into position.

6) **Secure and Close:** Reinstall the locking bracket and tighten the M4 nyloc nuts. Reinsert the soap cartridge, slide the filling chamber up, and lock it into place.

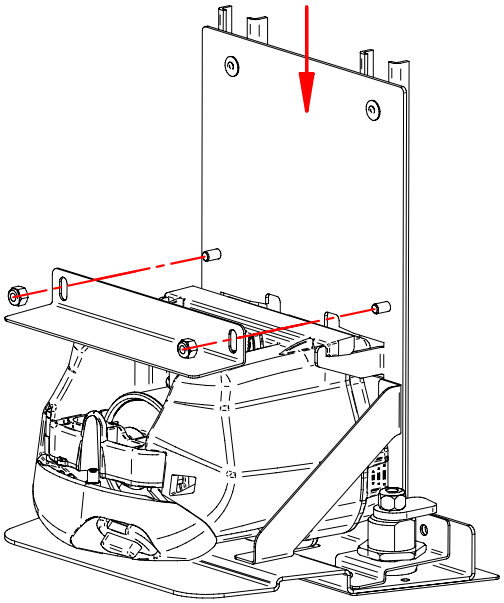

Remove locking bracket to release soap mechanism

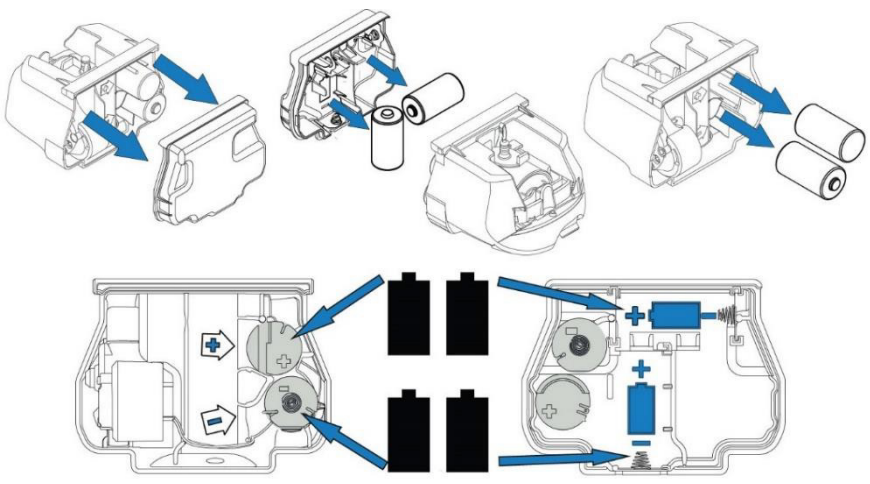

Replace batteries

General Maintenance & Cleaning

Brushed Stainless Steel Units:
Clean with warm water and a soft cloth, wipe in the same direction as the brushed grain. Dry thoroughly. DO NOT use soap, chemical cleaning detergents or abrasive cleaners.

Powder Coated Units:
Clean with a mild detergent and soft cloth. Ensure any detergent is fully rinsed off prior to drying thoroughly.

Troubleshooting

Soap not dispensing:

Check the cartridge to ensure soap is available.
Clean the nozzle with a soft warm cloth (NEVER INSERT ANYTHING INTO THE NOZZLE).
Fill an empty cartridge with a small amount of warm water and trigger dispensing to try and clear any soap build up.
Check batteries and replace following instructions on page 8.

Lost Key:

Spare keys can be purchased from our Customer Services Team call +44 (0) 1253 738311.

End of Life Disposal

All Dudley Industries units are manufactured to ensure longevity and a reliable life span. When a dispenser has reached its end of life it should be disposed of in a safe manner. Most components can be re-cycled in accordance with your local authority waste management policy.

INSTALLATION HEIGHT GUIDE

General Washrooms:

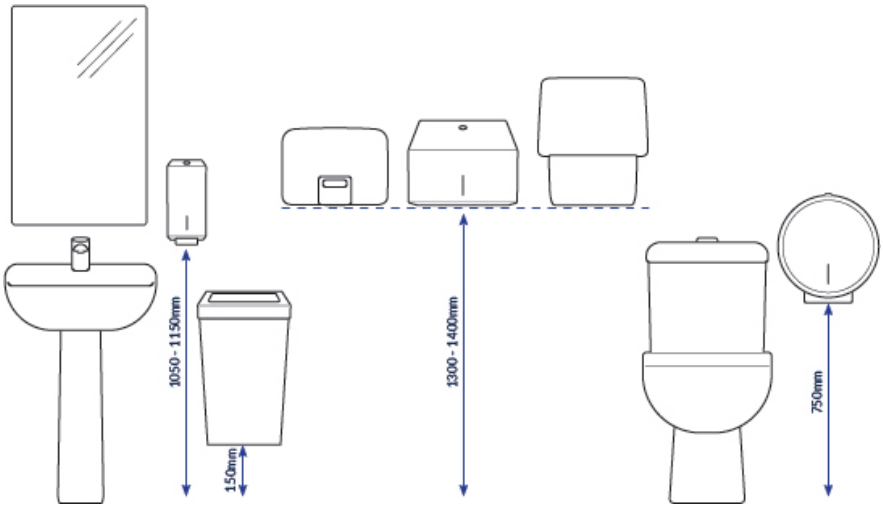

Above Counter:

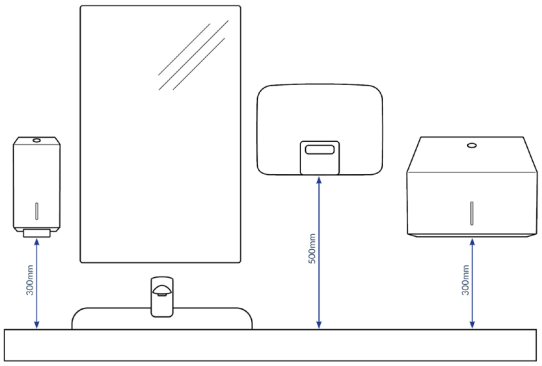

Accessible Washrooms:

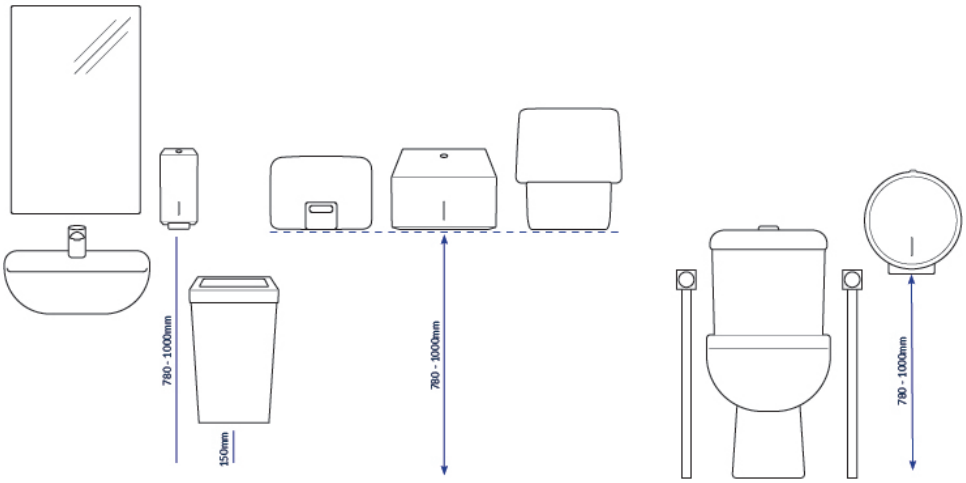

Dudley Industries Ltd
Preston Road, Lytham St Annes, Lancashire. FY8 5AT

Tel: +44 (0) 1253 738311
Email: sales@dudleyindustries.com
Web: www.dudleyindustries.com